GENERAL LASER

AGILE·X

Chassis and Robot Kits

LIMO

ROS-BASED MULTI-MODAL® MOBILE ROBOT FOR EDUCATION AND RESEARCH

Autonomous Navigation | SLAM&V-SLAM | Obstacle Detection

ROS ROS2 GAZEBO

PATENTED FOUR STEERING MODES

Four-wheel differential steering

Tracked steering

Omni-directional steering

Ackermann

SCALABLE STRUCTURE FOR DIY NEEDS

0.9L internal expansion space

Four USB Serial Port

METAL STRUCTURE, POWERFUL MOTOR

Metal sturdy appearance

Wheel-motor Integration

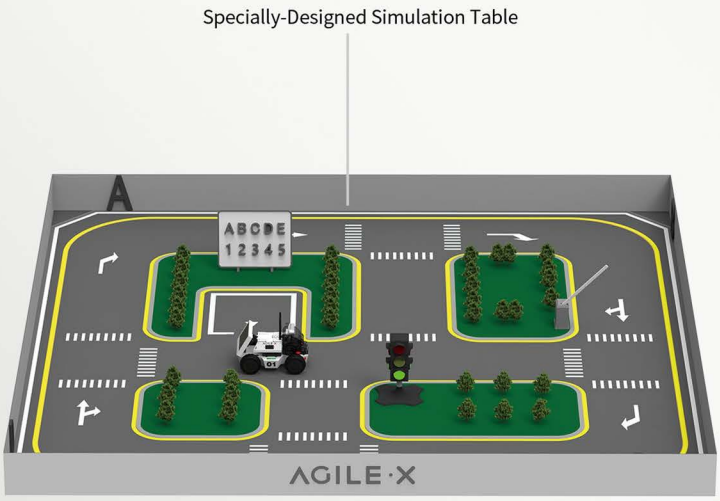

Easier to develop with Simulation Table	AgileX Open-source Community
SLAM & V-SLAM	**Built-in ROS&ROS2 Packages**
Autonomous Traffic Light Recognition	**Programming Demos**
Autonomous Reversing And Warehousing	**Simulations powered by Gazebo**
Autonomous Navigation and Detection	**Robot Development manual**

Product specification		
Mechanical Parameter	Dimensions	322x215x247mm
	Weight	4.2kg
	Climbing Ability	25°
Hardware System	Power interface	DC (5.5x2.1mm)
	Work time	40min
	Standby time	2h
Sensor	LIDAR	EAI X2L
	Camera	Stereo Camera
	Industrial PC	NVIDIA Jetson Nano (4G)
	Voice module	IFLYTEK Voice Assistant/Google Assistant
	Trumpet	Left and right channels (2x2W)
	Monitor	7 inch 1024x600 touch screen
software	Open source platform	ROS1/ROS2
	Communication protocol	UART
Remote control	Control method	APP
	Wheels included	Off-road wheel x4, Mecanum wheel x4, track x2

BUNKER Mini

Small-Size Tracked Mobile Robot Unmanned Ground Vehicle

IP67 Solids Protection/ Waterproof

115mm Obstacle Surmounting Capacity

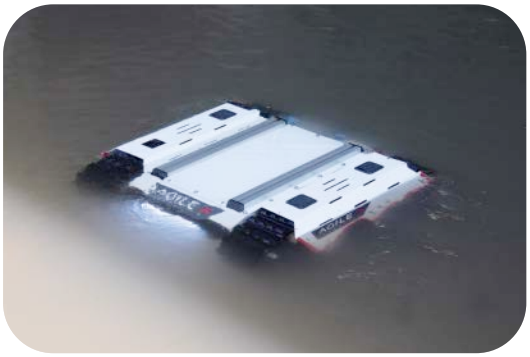

Capable of Deeply Wading Water

<30°

Better Climb Capability

35 KG

High Payload Capability

0°

Zero Turn Radius

ROS

Fully Extensive

Applications:
Waterway Surveying and Mapping
Mineral Exploration
Pipeline Inspection
Security Inspection
Unconventional Photographing
Special Transportation

Tech Specifications

Dimensions	660*584*281mm
Height	65.5mm
Track width	100mm
Weight	54.8kg
Maximum Payload	35kg
Max Speed	0~1.5m/s
Climbing Ability	30° (No payload)
Minimum Turning Radius	0m (In-situ Rotation)
Obstacle Surmounting Capacity	115mm
Operating Temperature	-20°C~60°C
Battery	24V 30Ah Lithium Battery
Charging Time	3-4h
External Power Supply	24V/15A
Charger	AC220V Charger
Power Drive	Left and Right Independent Drive Track-type Differential Steering
Motor	250W*2 (Brushed DC Motor)
Rated Torque	17N · m
Code Wheel	1024 Line Magnetic Encoder
Protection Level	IP67
Communication Interface	CAN

BUNKER PRO

The tracked-UGV mobile robotic development platform with super high off-road mobility for easily tackling challenging environments like soft soils, steep grades, puddles , box culverts, etc.

IP67

Long run time

Maximum gradeability

Strong load capacity

Shockproof & all-terrain

1500W dual-motor drive system

Fully extensible

Capable of deeply wading water

Applications
Agriculture
Building modes
Surveying and mapping
Inspection
Transport

Tech specifications

Dimension	1064*845*473mm（excluding antenna）
Interior dimension	800*370*300mm
Minimum ground clearance	120mm
Track	150mm
Grounding rod length	740mm
Weight	180kg
Payload during driving	120kg
Battery type	48V 60Ah Lithium battery
Charging time	4.5h
Motor	48V DC servo motor
Operating Ambient Temperature	-20°C~60°C
Wheel encoder	2500ppr photoelectric incremental encoder
Suspension	Christie suspension + Matilda four-wheel balance suspension
Rated power	1500W*2
Rated torque	144NM
Speed	0~1.5m/s
Maximum barrier height	180mm
Climb grade	30°no-load climbing(Can climb stairs)
Minimum turning radius	0M(Be able to turn on a pivot)
Suspension	6 independent absorbers on each side
Remote control distance	100M without obstacles
Battery duration	3h
Remote control	The right rocker controls the movement of the vehicle
IP rating	IP67
Communication interface	CAN / RS233

BUNKER

- Tracked Differential Steering
- Independent Suspension
- 17CM Obstacle Surmounting Capacity
- ZERO Turning Radius
- 36° Climbing Ability
- ROS/SDK Supported

Crawler-type Differential Wire-controlled Chassis

BUNKER adopts crawler-type differential mechanical mechanism, which has extremely strong terrain adaptability. It is specially designed for special working environment and features differential rotation, strong load capacity, small mechanical loss and high ingress protection rating.

Tough Process Design, Special Operation Platform

Multiple sets of servo motors provide extremely strong power system and differential rotation ability. The Christie suspension equipped with multiple sets of shock absorbers provides extremely strong system stability. The integrated forward tilt design brings superior climbing ability. The tough industrial design makes BUNKER competent for various field complex environments.

Extreme terrain adaptability

High-performance track structure conquers muds

Able to climb slope gradient < 36° and stair with single step < 17 cm

Multiple-load Expansion, Rapid Secondary Development

BUNKER can be customized for a variety of advanced operation modes. Users can communicate with the main control through CAN bus protocol, and the open source SDK and ROS_ PACKAGE are also provided.

Slide rails are reserved for quick building top load (sensing, industrial control, IMU, routing, camera, etc.)

Supports customized design of sensor Al profile bracket

Supports access of more advanced automatic driving system (such as ROS, Apollo, etc.)

SPECIFICATIONS

Model	BUNKER
Dimensions	1023* 778*400mm WxHxD
Wheelbase	360mm
Weight	130~ 135KG
Minimum Ground Clearance	90mm
Rated Travelling Load	80KG
Rated Spin Load	60KG
Climbing Capacity	36°(No Load and With Loading) Can Climb Stairs
Minimum Turning Radius	0m In-situ Rotation
Obstacle Abilit	170mm
MAX Travel	10KM
Shock Absorber	Left and Right Lndependent * 6 Shock Absorbers

Operating Temperature	-20~60°C
Drive Form	Left and Right Independent Drive Track Differential Steering
Charger	AC220V Independent Charger
Charging Time	6~7H
Outward Supply	48V
Battery	48V30Ah (Standard) 48V60Ah (Optional)
Motor	2X650W (brushless servo motor)
Code Wheel	1024 Lines
Gyroscope Parameters	9-axis Gyroscope 0.01°Resolution
Suspension Form	Christie Suspension
Communication Interface	Standard CAN
Protection Level	IP52 (Standard) IP54 (Optional)

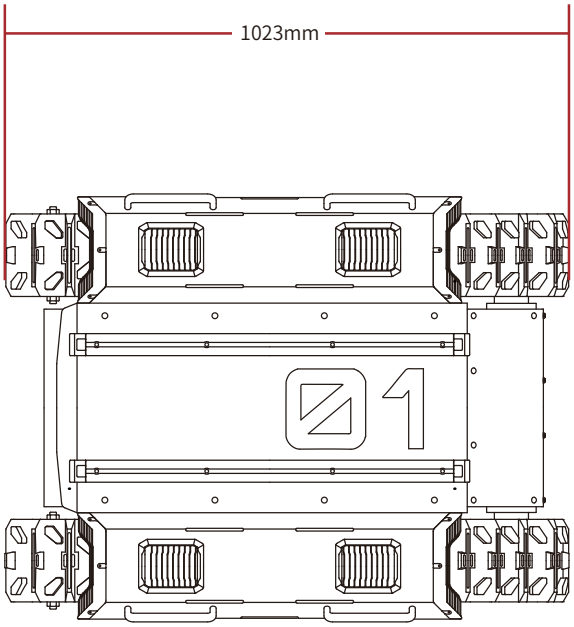

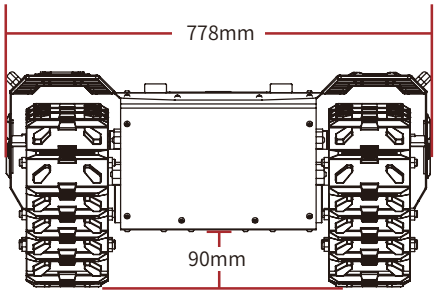

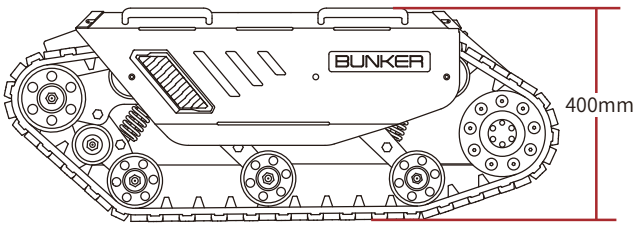

SCOUT MINI

- Speed 10km/h
- Secondary Development
- 4-WD Steering
- Independent Suspension

SCOUT MINI

SCOUT MINI is a member of the SCOUT mobile robot family and inherits the advantages of SCOUT — 4WD, independent suspension, and in-place self-rotation.

AgileX Robotics has introduced camera accessories and panoramic camera accessories which are adapted to SCOUT MINI, so that the SCOUT MINI can meet the application of various kinds of terrains and scenarios with high mobility required, such as petrolling, photographing and exploration.

Dimensions	615mm x 580mm x 245mm W×H×D
Gross Weight	22.5KG
Gradability	30°
Obstacle-Surmounting Performance	70mm
MAX Speed	10km/h (Standard Wheel) 5km/h (Mecanum Wheel)
MAX WORK TIME	10KM
Payload	20KG (Standard Wheel) 50KG(Mecanum Wheel)
Suspension Form	Independent Suspension
Protection Level	IP22
Interface	CAN RS232

Inspection industry

Mobile Phone Kit

Experimental education

ROS 4WD

SCOUT 2.0

| Four-Wheel Drive | Independent Suspension | Cooling System

| External Expansion | Secondary Development

Steer-by-wire Chassis

SCOUT is an outdoor mobile base designed for industrial applications. SCOUT2.0, with remolded structure design, under the newly upgraded cooling system and safety system, still adheres to the concept of being suitable for any application environment. The more compact design expands the indoor scenarios again; the independent suspension can adapt to various rugged paths; the zero turning radius can easily control the narrow environment; and the standardized protocols and interfaces facilitate rapid secondary development.

This mobile base can be used for inspection,transportation,teaching and other scenarios by installing different upper loads and navigation systems.It has the characteristics of standardization and modularization,it presents the best mobile platform solution for you.

Structural Advantages

The core of the structural design of SCOUT series is always compact. Under the premise of guaranteed function, the body size of SCOUT2.0 is reduced by 25% from that of SCOUT1.0, adding infinite possibility to its application environment again: its compact body can enter the ordinary elevator room; it can realize the free switching between indoor and outdoor; it is suitable for any car trunk; it can be quickly put into use on the site.

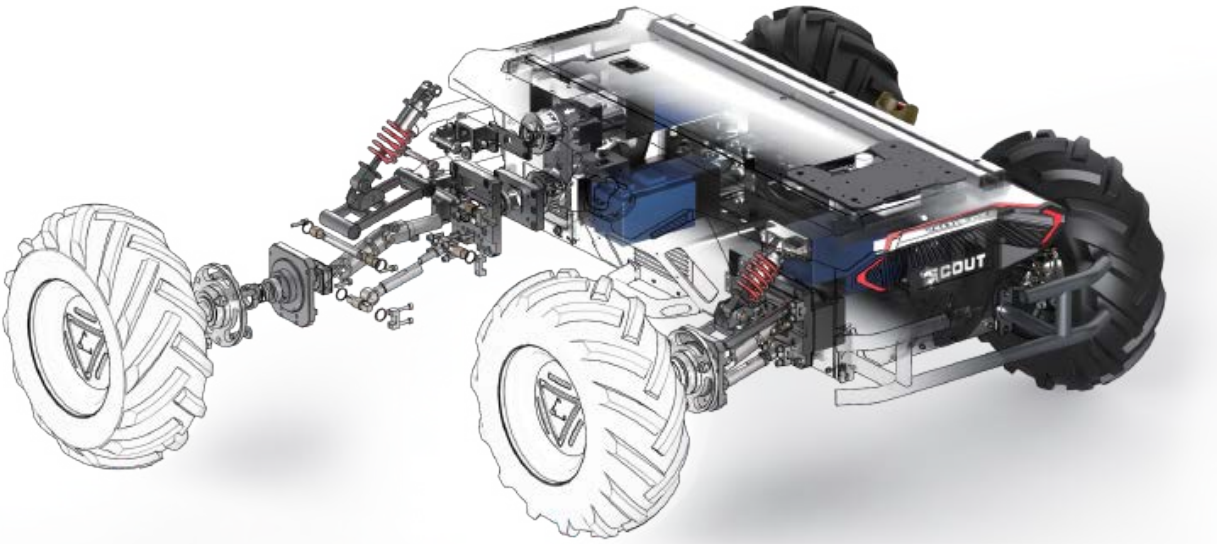

SCOUT2.0 carries forward the four-wheel drive feature of SCOUT1.0. Each wheel adopts independent 400w brushless servo motor and adopts double-transverse arm independent suspension, which can greatly improve the adaptability of the body to the terrain while ensuring the power, and ensure the stability and anti-interference ability of the load. As a result, it can easily surmount 10cm obstacles and work easily in the outdoor environment.

Upgrading of Cooling System

In respect of the fully upgraded cooling system of SCOUT2.0, the internal and external circulation cooling systems are integrated; and the heat conduction module is additionally provided with directional cooling for driving module and power unit. Under the premise of ensuring the IP level of protection of the body, a strong fan module is provided, effectively improving the operating duration of the chassis and adapting to the high-temperature environment. There are also real-time temperature monitoring and other security measures, providing more secure and reliable protection for the chassis in real time.

External Expansion and Secondary Development Supported

SCOUT2.0, with independent BCDC Driver control system, can accomplish its own motion control, and can customize the complex operation mode. The master control provides serial port / standard CAN busbar as the communication interface and provides open source SDK,ROS_PACKAGE.

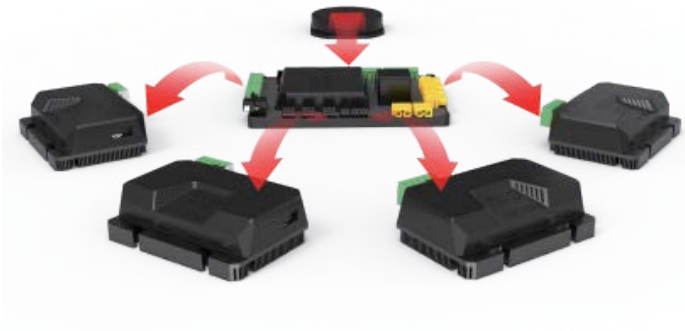

A bus interface is reserved around the body, and the top design with standard aluminum profiles is convenient for customers to match and access a series of external equipment such as differential GPS, binocular camera, laser radar, infrared/ultrasonic obstacle avoidance sensor, etc., allowing customers to complete customized in-depth secondary development.

SCOUT 2.0 also supports access to more advanced self-driving systems, such as ROS, Baidu Apollo, etc., which can be used as a mobile platform for application development.

ROS apollo

SPECIFICATION

Model	SCOUT 2.0
Dimensions	930mmx699mmx349mm W x H x D
Wheelbase	498mm
Front/rear wheel base	582mm
Gross Vehicle Weight	68KG (±0.5)
MIN Ground Clearance	135mm
Rated Progressive Load	50KG Friction coefficient 0.5 ground test
MAX speed	6km/h
MIN Turning Radius	0m
Gradability	<30° with loading
Obstacle-Surmounting Performance	15cm
MIN Braking Distance	0.2m 6km/h -> 0km/h
Braking System	Servo Brake

MAX Working Range	15km
Drive System Form	Four Wheel Independent Drive Four Wheel Differential Steering
Suspension Form	Front Double Wishbone-Independent Suspension Rear Double Wishbone- Independent Suspension
Safety Precautions	Collision Avoidance Tube
Working Temp	0~40°C
Charger	AC 220V Independent Charger
Charging Period	2.5~3H
Voltage	24V
Battery	24V / 30Ah
Motor	4 x 400W Brushless Servo Motor
Code Wheel	2500 Lines Magnetic Incremental Encoder
System Interface	Standard CAN 232 Serial Port
Protection Level	IP22 Customizable IP44 IP64

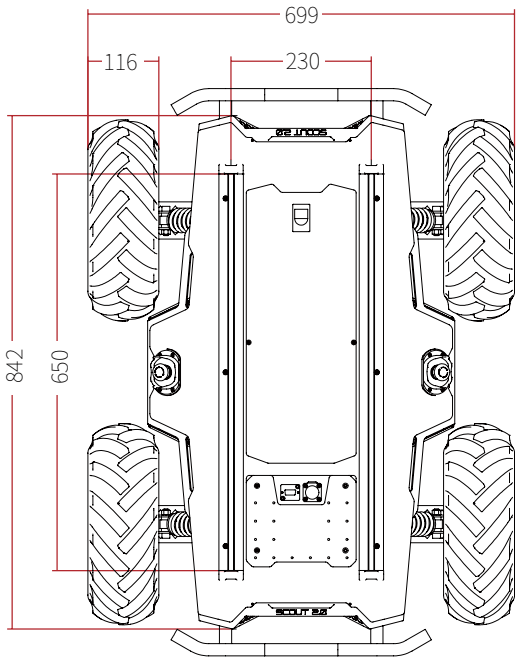

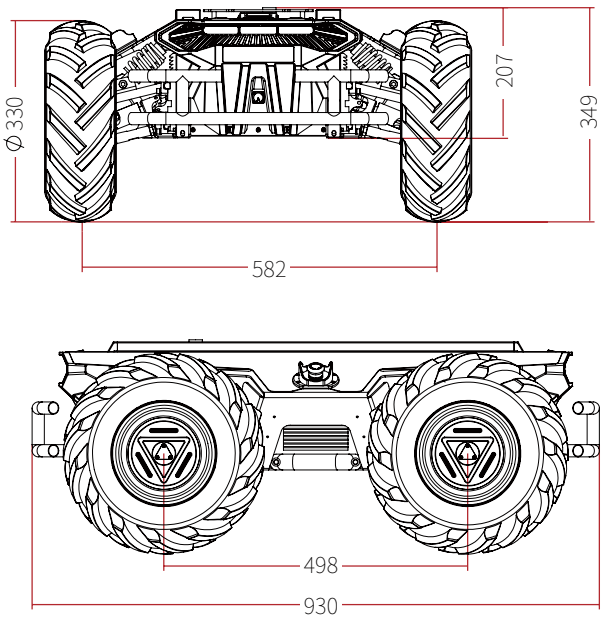

HUNTER SE

The Ackermann Front Steering Drive-by-wire Chassis

Independent Suspension

4.8m/s

Upgraded Driving Speed

<30°

Applications	
Autonomous Parcel Delivery	Unmanned Food Delivery
Unmanned Logistics	Patrolling

Tech Specifications

Dimensions	820*640*310mm
Height	123mm
Weight	42kg
Maximum Payload	50kg
Max Speed	4.8m/s
Climbing Ability	30° (No Load)
Minimum Turning Radius	1.5m
Obstacle Surmounting Capacity	50mm
Battery Running Time	2-3h
Running mileage	>30km
External power supply	24V/15A
Power Drive	Rear Wheel Hub Motor Driven
Motor	350W*2 (Brushless DC motor)
Operating Temperature	-20°C ~ 60°C
Communication Interface	Standard CAN
Protection Level	IP55
Battery	24V30Ah Lithium Battery
Charger	AC220V Independent Charger
Charging Time	3h
Braking Method	2m

HUNTER 2.0

| Ackerman Steering | Removable Battery | 150KG Heavy Load

| Slope Parking | Secondary Development

Customized Chassis Solution

The HUNTER 2.0 battery pack is lithium iron phosphate-based, offering flexible configuration to meet your task-based capacity needs. Customized speed planning up to 10km/h is available to meet the needs in various autonomous driving scenarios and support a wide set of use cases for industrial-grade robotics.

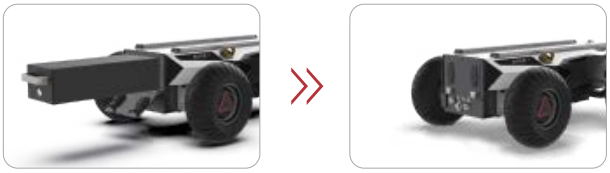

- Portable battery packs are provided with two capacity options for easy switch.
- BMS Battery management system (BMS) ensures safety during operation.
- Speed planning up to 10km/h is supported.

Brand-new Power System

HUNTER 2.0 continues the simple and elegant look of the HUNTER series with all-steel body, 400w dual servo motor drive, independent front wheel steering and robust, precisely controlled power system to support smooth running, whether indoors or outdoors.

- Advantageous car-like structure and low tire wear are suitable for high-endurance scenarios.
- Independent front-wheel steering and rocker suspension make it possible to pass over speed bumps with ease.
- 400w dual servo motor with payload up to 150KG.

Safe and Reliable Power-off Parking

HUNTER 2.0' s slope parking feature allows a reliable standstill on a slope, thanks to the well-designed drive train. In the event of power outage or failure of the vehicle while traversing sloped terrains, wheels will be locked in place without slipping off to ensure stable and reliable safety performance.

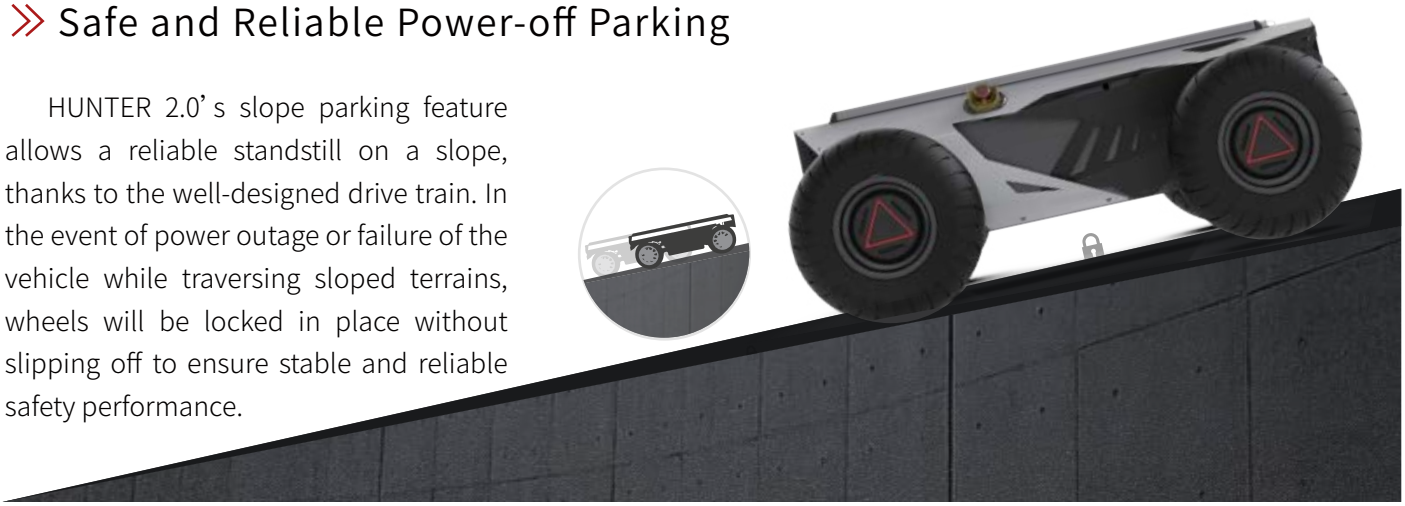

SPECIFICATIONS

Model	HUNTER 2.0	Suspension Form	Front Wheel Independent Suspension
Dimensions	980 x 745x 380mm W x H x D	Drive System Form	Front-wheel Ackerman Steering Rear-Wheel Drive
Wheelbase	650mm	Working Temperature	-20~65°C
Track	605mm	Battery	24V30Ah (Standard) 24V60Ah (Optional)
Speed and Payload	6km/h, 150Payload (Standard) 10km/h, 80KG Payload (Optional) Customizable	MAX Travel (without loading)	22Km (24V30Ah Battery) 40Km (24V60Ah Battery)
Weight	65~72KG	Charger	AC 220V Charger Output 240W
Minimum Turning	1.6m	Charger Period	3.5h (24V30Ah Battery) 7h (24V60Ah Battery)
Climbing Ability	<10° With Loading	Outward Supply	24V15A Maximum total output current
Obstacle Surmounting Capacity	5cm Single-stage Right-angle Step	Code Wheel	2500 Lines Magnetic Incremental Encoder
Minimum Ground Clearance	100mm	Motor	Drive 2x400W streeing 400W Servo Motor
Minimum Braking Distance	0.2m 6km/h -> 0km/h (It depends on the ground conditions)	System Interface	Standard CAN 232 Serial Port
Steering Accuracy	0.5°	Protection Level	IP22(Customizable IP54)
Parking Function	Electromagnetic power-off parking, maximum 10° ramp parking(For parking only)		

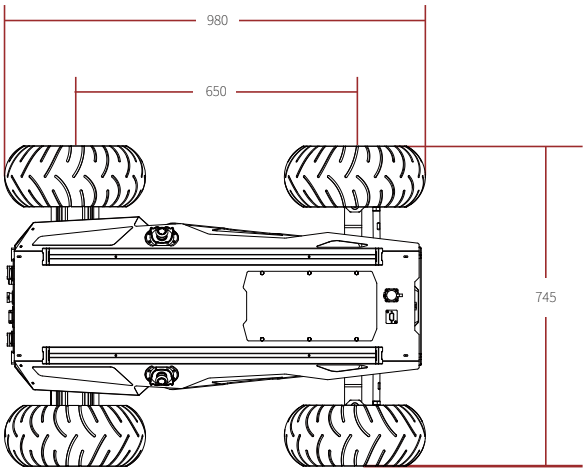

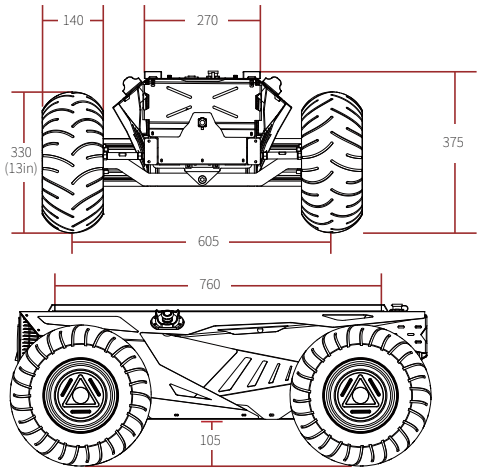

RANGER MINI

- Four Wheel Independent Steering
- Multiple Moving Modes
- Secondary Development Supported
- Quick Release Battery

Four Modes, One Button

Ranger Mini carries forward AgileX' s technical heritage of omnidirectional UGV by featuring a compact body and zero turning radius to achieve 360° static steering.

- All-metal body with robust industrial design
- 4 x 120 W steering motors + 4 x 250 W driving motors
- Support Spin, Traverse, Diagonal and Ackermann modes

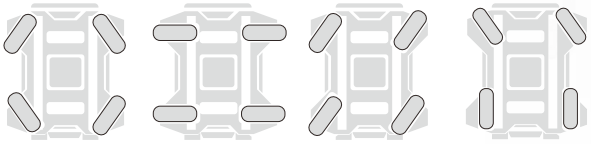

Spin Traverse Diagonal Ackermann

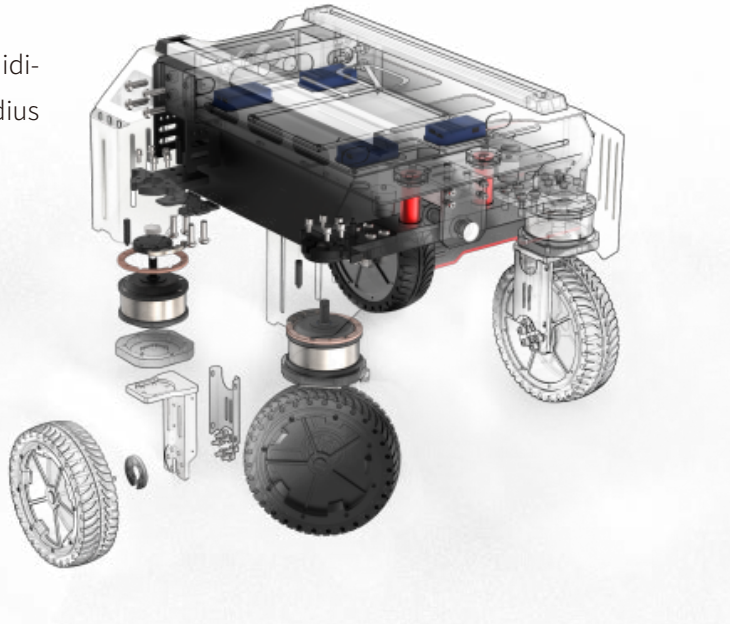

Agile Movements and Robust Performance

As a UGV with superb flexibility and performance, Ranger Mini combines the obstacle-climbing ability of SCOUT series with the high load capacity and long battery life of HUNTER series.Thanks to AgileX' s technical heritage in motion control, it can easily operate in both indoor and outdoor environments. Swing arm suspension and higher ground clearance bring a fresh movement experience for indoor and outdoor work.

200mm 200 mm ground clearance and 10° climbing capacity (full load)

50 KG 50 KG load capacity

Removable Battery, Long Run Time

The run time of Ranger Mini lasting up to 5 hours, and the battery is removable designed.

5 Hours Run Time

Quick Battery Replacement

Specifications

Model	RANGER mini
Size	558mmx492mmx420mm
Wheelbase	360mm
Tread	360mm
Overall Mass	55KG
Maximum Speed	6km/h
Ground Clearance	212mm
Minimum Turning Radius	0mm Spin mode
Wheel Hub Radius	8 inch
Brake Type	Electronic brake
Rated Load In Movement	50KG
Maximum Slope	10° (with load)
Steering Type	Four wheel independent
Maximum Mileage	20KM
Maximum Battery Life	5~6h

Drive Type	In-wheel motor
Cooling Type	Air-cooled
Operating Temperature	—10~40°
Charger	29.4V10A
Charging Time	4H
Voltage	24V
Power Battery Type	Lithium iron phosphate
Battery	24V30AH (standard) 24V60AH (optional)
External Power Supply	24V
Motor	4 x 120 W steering and 4 x 250 W driving
Encoder	1024 Lines
Communication Interface	Standard CAN
Suspension Type	Swing arm suspension
Protection Level	IP22

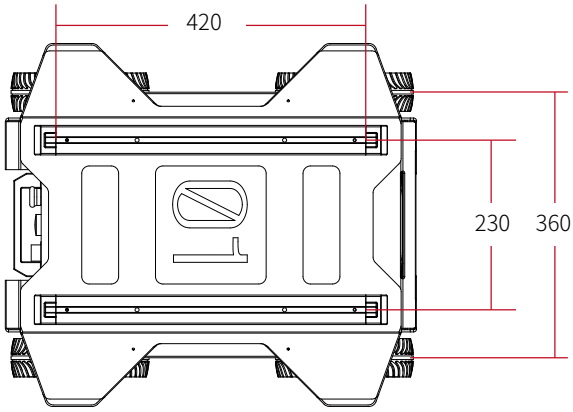

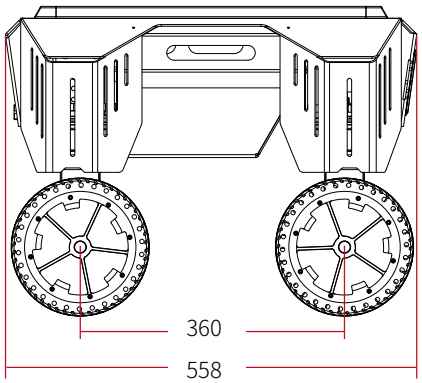

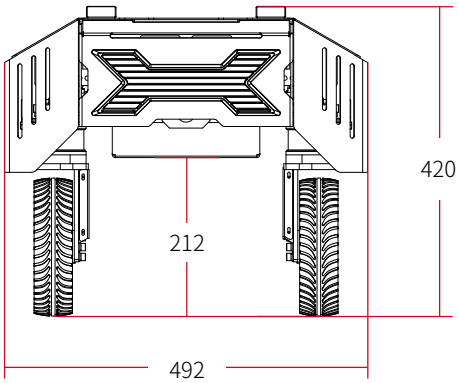

TRACER

| Indoor Shuttle | High-speed AGV

| Explore the fun of indoor mobility

Indoor Two-Wheel Differential Wire-controlled Chassis

TRACER, as a two-wheel differential AGV, has unique advantages in the field of indoor transportation. Its small and flexible structure enables it to freely shuttle in various indoor environments. Its single handling efficiency has great advantages due to the high bearing capacity in combination of the strong power. Provided with the sensing system, it even operates more autonomously. As TRACER features low cost, high efficiency and fast deployment, it is the king of cost performance in indoor transportation scenarios.

Flat Design for Free Shuttle

The flat design of the body brings extreme bearing capacity. The two-wheel drive puts the universal wheels in motion, which can realize differential rotation and free shuttle in the indoor environment. It is additionally equipped with swing arm independent suspension which leads to easy surmounting of small obstacles.

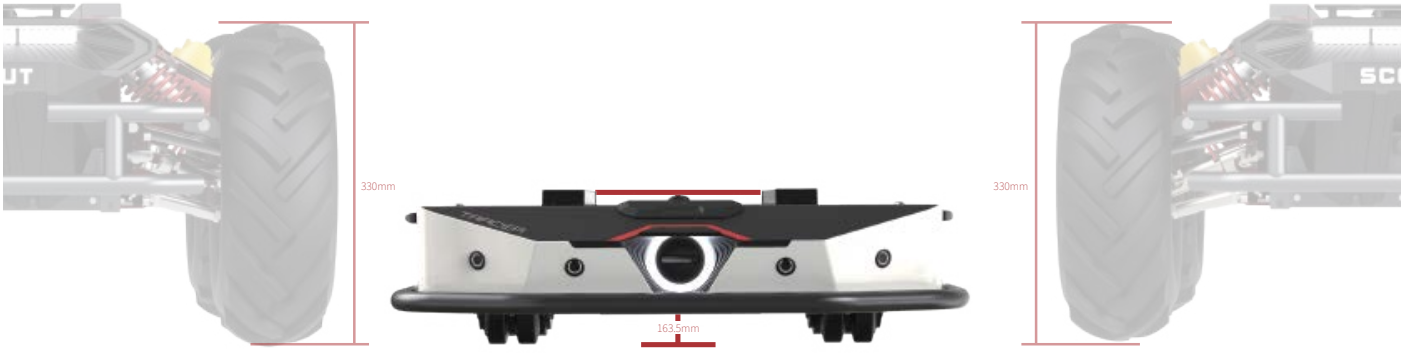

Multiple-load Expansion, Rapid Secondary Development

TRACER can be adapted to lightweight operation mode. Users can communicate with the main control through CAN bus protocol, and the open source SDK and ROS_ PACKAGE are also provided.

Installation positions are reserved for slide rails and front & rear sensors, for quick adaptation of lightweight automatic driving system.

Supports customized design of sensor Al profile bracket

Supports access of more advanced automatic driving system (such as ROS, Apollo, etc.)

SPECIFICATIONS

Dimensions	685*570*155mm
Track	360mm
Weight	28-30KG
Minimum Ground Clearance	30mm
Rated Progressive Load	100KG
Climbing Capacity	⩽8°
Minimum Turning Radius	0m (Can Rotate In Place)
Obstacle Ability	10mm
Suspension Form	Independent Suspension With Rocker Arm
MAX Speed	6KM/H

Drive Form	Two-wheel Differential Steering Drive
Operating Temperature	-20~60°C
Operating Time	4h
Charging Time	2h
Outward Supply	24V5A
Battery	24V/15Ah(Standard) 24V30Ah (Optional)
Code Wheel	1024 Lines Photoelectric Incremental Code Wheel
Motor	2 X 150W Brushless Servo Motor
Communication Interface	Standard CAN RS232
Materia	Steel Body

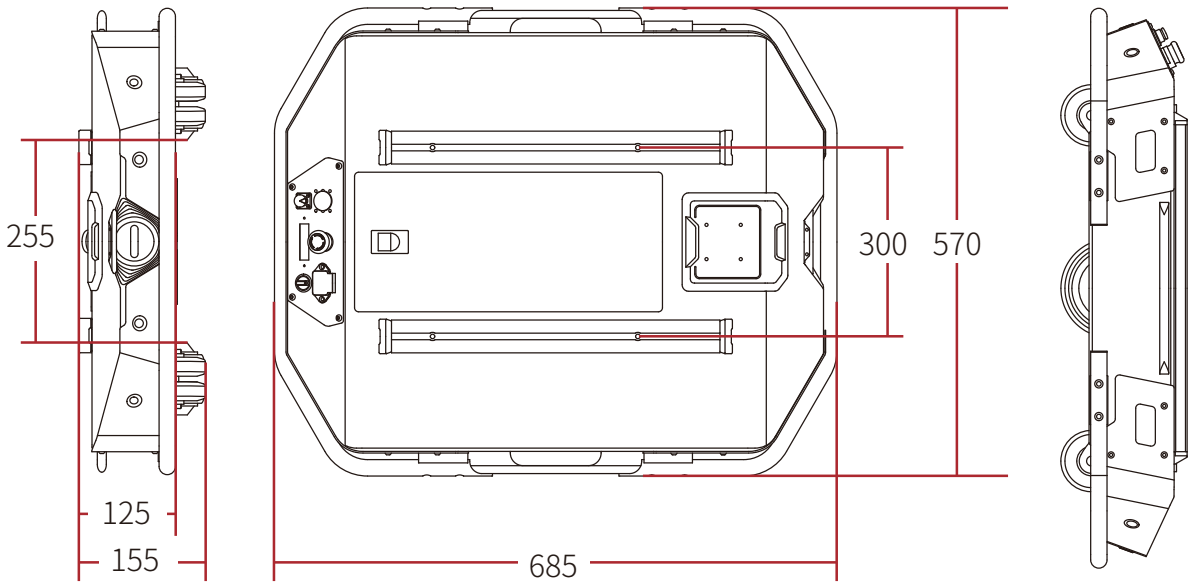

Mobile Operation Robots

Precisely Clamping and Delivering, Empowering Unmanned Factory.

Functions

Abundant Combination

Equipping with claws, sucker and other end effectors.

Easy Deployment

Based on Lidar and Vision navigation, deployment can be done within a week.

Precise Docking

The accuracy of end effector is better than ±1mm, robot can dock to equipment precisely.

Intelligent Dispatch

Intelligently task allocation and dynamic cluster control.

Continuous Operation

Autonomous recharge or battery replacement, providing continuous productivity.

Safe and Stable

Stereoscopic detection and intelligent obstacle avoidance.

Configuration

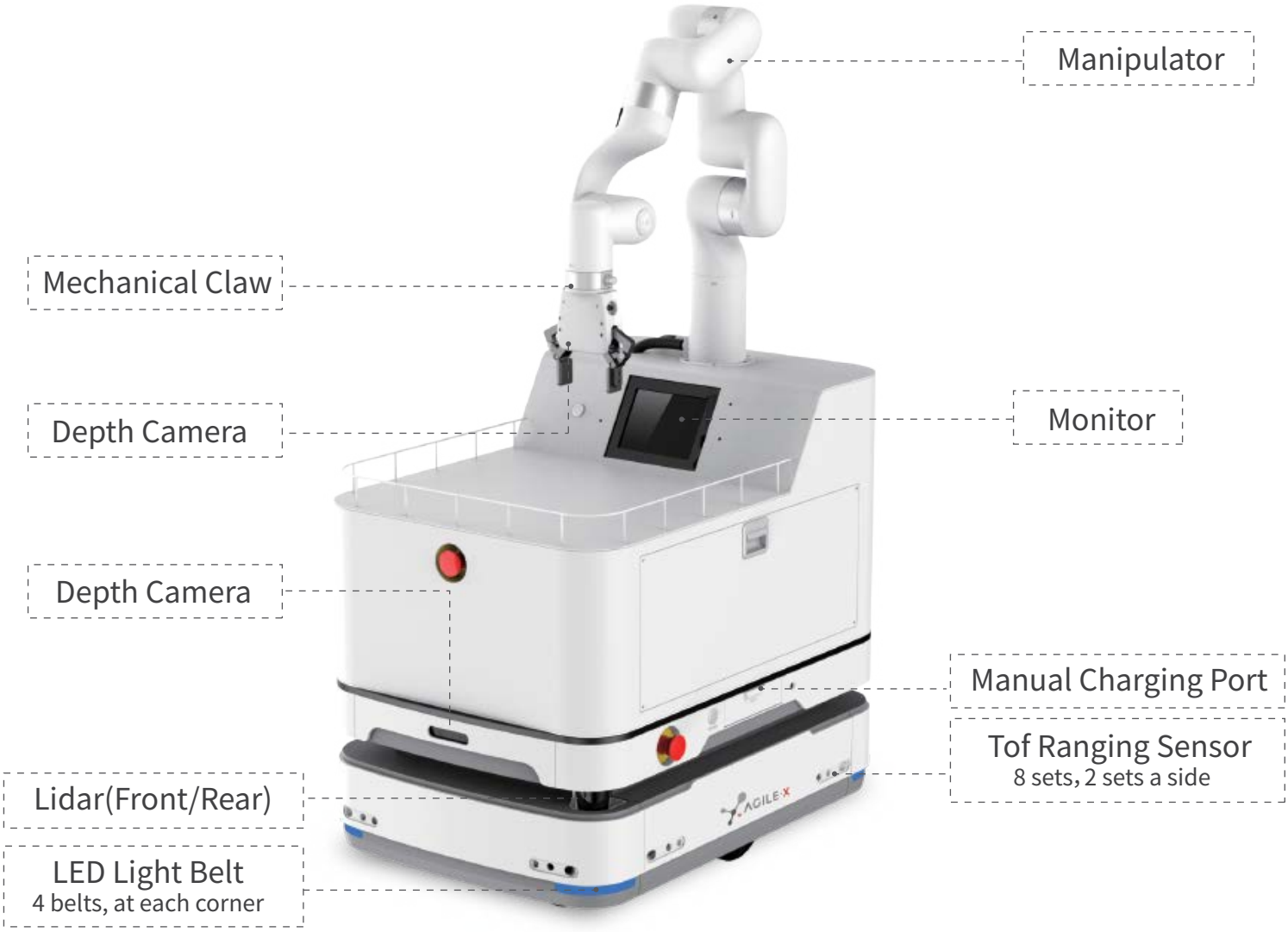

Deployment Accessories

UWB Station, Remote Control Box, Charging Pile

Parameter

The functions, parameters and appearance will be adjusted as technology upgrade, please check with our sales representative before purchasing.

Model	Mobile Operation Robot
Dimensions	820x560x1440mm
Weight	160kg
Payload	160kg
Turning Radius	470mm（Turning on its center）
Aisle Width(one way)	860mm
Aisle Width(turning)	1440mm
Navigation Method	Autonomous navigation based on SLAM
Driving Method	Two-wheel differential
Brake Method	Slow down/Emergency stop
IP Class	IP21
Max Speed	Rated speed: 1.25m/s , Max angular velocity: 120°/s, Max navigation speed: 1.2m/s
Environment	5~40 °C
Humidity	10~95 RH%
Lithium Battery	Rated voltage: 24V , Capacity: 40Ah , Charging time: 2.5h , Running time: 8h (Continuously running under full load)
Charging Voltage	29.4V
Rated power	650W
Positioning accuracy	Positioning precision: ±100mm/±3° With VL mark: ±10mm/±1°
Traversability	Traversable gap: 20mm , Traversable step: 10mm , Traversable step: 5% (Only chassis)
Ground	Hard, flat ground (No water/oil/dust)
Communication	Wi-Fi: 802.11a/b/g/n/ac I/O: USB and RJ45
Standard Accessories	AC adapter
Protection	Lidar (Front and rear), Depth Camera (Front), Emergency Stop Button (Left, right side, and front of manipulator base), TOF Ranging Sensors (Each side), LED Light and speaker alert

Accessories			
	 UWB Station	 Remote control box	 Charging pile

AUTOPILOT KIT

GPS Waypoint Navigation Development Platform

AgileX Autopilot Kit is a hardware and software solution that allows users to navigate by selecting GPS Waypoints, while also avoiding obstacles. It enables autonomous navigation and positioning, accurate route planning without the need for preloaded maps. Autopilot Kit is compatible with multiple high-performance AgileX chassis that provides outstanding off-road and climbing performance in scenarios such as agriculture, outdoor survey, construction and environmental monitoring, and perimeter security.

Autonomous obstacle avoidance with LiDAR

Auto navigation from point to point

CM-level RTK autonomous positioning

High-precision 3D mapping

Four-wheel independent suspension

Rich ROS simulation tutorials

*Chassis options

Scout Mini off-road version

Bunker

Scout2.0

Specifications

Vehicle body			
Model	Scout Mini	L×W×H (mm)	627x549x248
Front/rear wheelbase (mm)	450	Vehicle weight (KG)	20
Max speed without load (km/h)	10.8	Min turning radius	Turnable in situ
Max climbing capacity	30°	Min ground clearance (mm)	107
Front/rear wheelbase (mm)	450		

Binocular camera

Model: Intel Realsense T265
Chip: Movidius Myraid2
FoV: Two fisheye lenses, combined with nearly hemispherical 163±5.
IMUB: BMI055 inertial measurement unit allows precision measurement of rotation and acceleration of equipment

Depth camera

Model: Intel Realsense D435i
Depth technology: Active IR Stereo
Depth stream output resolution: Up to 1280*720
Depth stream output frame: Up to 90fps
Min depth distance: 0.1m

Laser radar

Model: Rplidar S1
Laser ranging technology: TOF
Measuring radius: ≤40m
Sampling speed: 9200 times/s
Measuring resolution: ≥1cm
Scanning frequency: 10Hz (8Hz-15Hz adjustable)

RTK-GPS module

Satellite signal Supported Types: GPS / BDS / GLONASS / QZSS
RTK positioning accuracy:
horizontal 10mm +1ppm/vertical 15mm +1ppm
Orientation accuracy (RMS): 0.2° / 1m baseline
Speed accuracy (RMS): 0.03m/s
Time accuracy (RMS): 20ns
Differential data: RTCM2.x/3.x CMR CMR+ / NMEA-0183、BINEX
Data Format: Femtomes ASCII and Binary format
Data Update: 1Hz / 5Hz / 10Hz / 20Hz（optional）

Pixhawk 4 Autopilot

FMU processor：STM32 F765
IO processor：STM32 F100
Accel/Gyroscope：ICM-20699
ACMEL/Gyroscope：BMI055
Magnetometer：IST8310
Barometer：MS5611
Servo Guideway Input：0~36V
Weight：158g
Size：44x84x12mm
GPS：ublox Neo-M8N GPS/GLONASS receiver; integrated Magnetometer IST8310

Onboard Computer

Model：X86
CPU：I7-8th Generation
Memory：8G
Storage：128G solid state
System：Ubuntu 18.04
ROS：melodic

Cobot Kit

Autonomous mobile manipulator For Your R&D Project

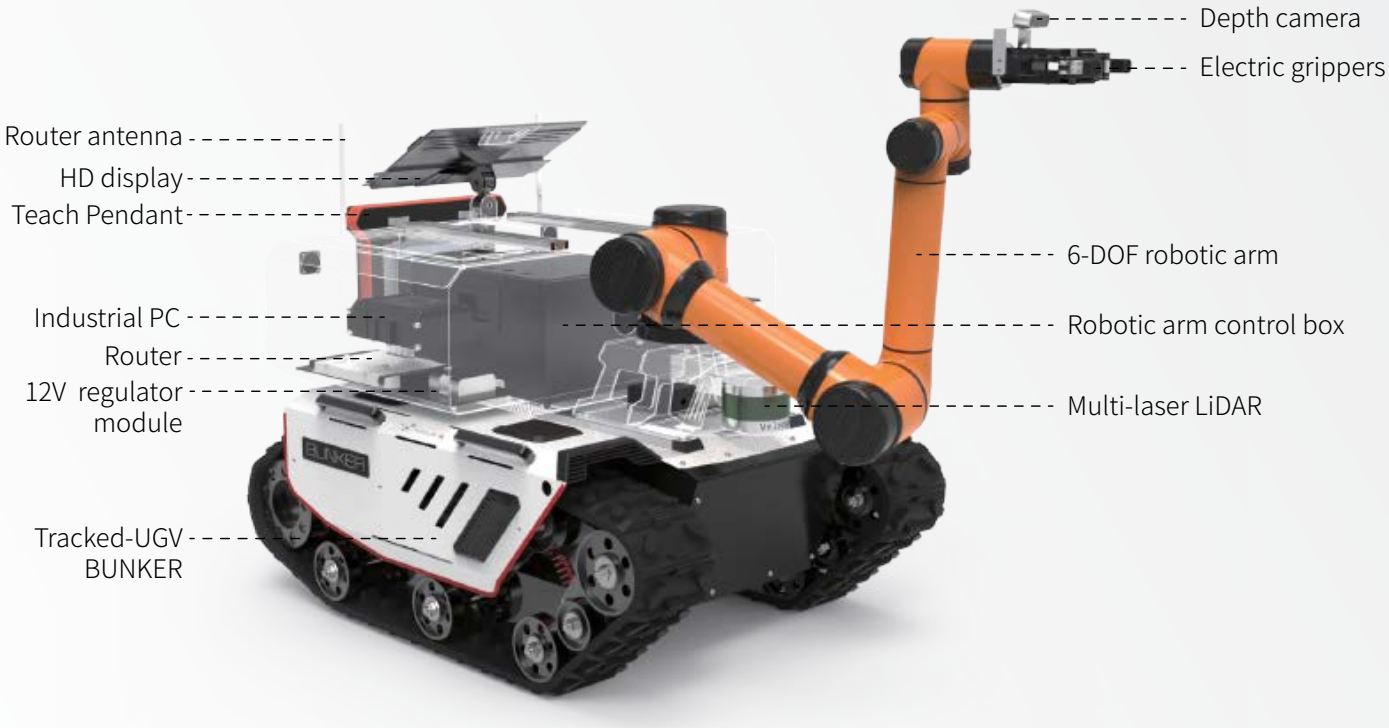

· **Fully pre-installed ROS node**	· **All-terrain**	· **High-precision 3D mapping**
· **Simulation models powered by RVIZ and Gazebo**	· **Autonomous navigation and obstacle detection**	· **Open source programs and Demos**

Adaptable chassis

Bunker

Scout2.0

Applications

Agriculture | Mining | Forest | Urban road | Factory

	AUBO i5		xArm 6
	Adaptable Chassis：Bunker		Adaptable Chassis：Scout2.0/Hunter2.0/Ranger mini
	Payload：5KG		Payload：5KG
	Weight (excluding controller)：<24KG		Weight (excluding controller)：12.2KG
	Arm's reach：1053.5mm		Arm's reach：700mm
	DOF：6		DOF：6
	Repeated positioning precision：±0.02mm		Repeated positioning precision：±0.1mm

Accessories	Accessories list
Computing unit	APQ industrial computer
Multi-line LiDAR	Multi-line LiDAR sensor
	Sensor controller
LCD module	Portable flat panel display
	USB-to-HDMI cable
Power module	Switching DC-DC19~72V to 48V power supply
	DC-to-DC 12V24V48V power supply
	24v~12v step-down power module
Communication module	UBS-to-CAN module
	4G router
	4G router and antenna
Chassis module	Bunker/Scout2.0/Hunter2.0/Ranger mini
	Aviation plug (with wire)
	Onboard controller

Features of kit
ROS pre-installed in Industrial Personal Computer (IPC), and ROS nodes in all sensors and chassis.
Navigation and positioning, mapping, and DEMO based on multi-line LiDAR.
Motion control (including point and path control), planning, and staticobstacle avoidance based on robotic arm ROS node "Move it"
ROS control over robotic arm gripper AG-95
QR Code positioning, object color and shape recognition, and DEMO grasping based on Intel Realsense D435 binocular camera

A fully integrated solution for robotics research and development with our Scout Mini platform. Equipped with a full suite of sensors to support indoor SLAM, Navigation and Vision based applications. A powerful NVIDIA Jetson Nano computer comes pre-installed with Linux and ROS Ubuntu 18.4. Scout Mini Development kit accelerates robotics applications and research by eliminating the need to design, manufacture and Integrate a complex robotic system.

Research and Development kit

Research and Development kit - Pro

What' s included?

Nvidia Jetson Nano

- ARM A57 @ 1.43 GHz CPU
- 128 Maxwell GPU
- 4GB 64 LPDDR4 25.6GB/s
- HDMI/DP, USB 3.0, USB 2.0 Micro-B

Nvidia Xavier

- ARM v8.2 64 CPU
- 512 Tensor Core Volta GPU
- 32 GB 256 LPDDR4x
- 32 GB eMMC 5.1
- HDMI 2.0、USB 3.1、RJ45

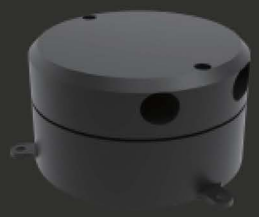

EAI-G4 Lidar (ADD PHOTO)

- Rotate 360-degree scanning distances measurement and 0.26-0.3° angular resolution
- 5-12Hz scanning frequency and
- 9000 times/S high-speed ranging 0.1-16m ranging radius
- magnetic wireless technology and low-loss industrial design

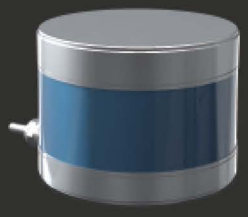

VLP16 Lidar (ADD PHOTO)

- 360° horizontal scanning and 0.1-0.4° angular resolution
- ±15° Vertical scanning and 2° angular resolution
- 5-20Hz scanning frequency, up to 300,000 point-data/S output and 01-100m ranging radius
- IP67 protection level and ultra-long service life

Intel Realsense D435 stereo depth camera

- FOV =87° × 58°
- Depth output resolution 1280 X 720
- Depth frame rate up to 90 fps
- Ideal ranger .3m to 3m

Portable 11.6 inch monitor

- 480g/8mm ultra-thi
- 1920*1080P
- USB Type-C direct connection

Full integration (Hardware / Software / Mounting)

- Pre-installed with Linux and ROS Ubuntu 18.4
- Pre-installed hardware drivers allowing all sensors to be controlled by onboard PC.
- Fully integrated sensor mounting plates. Methodically designed for highest IP rating, and best placement of sensor. Allows for easy access and additional integration of new components.
- Compatible with Scout Mini, Tracer, SCOUT2,0 and BUNKER.

Onboard open source SLAM based mapping

- Development tools include viz, Gazebo and Nomachine. Communication (Ros) nodes are provided for mapping and navigation.

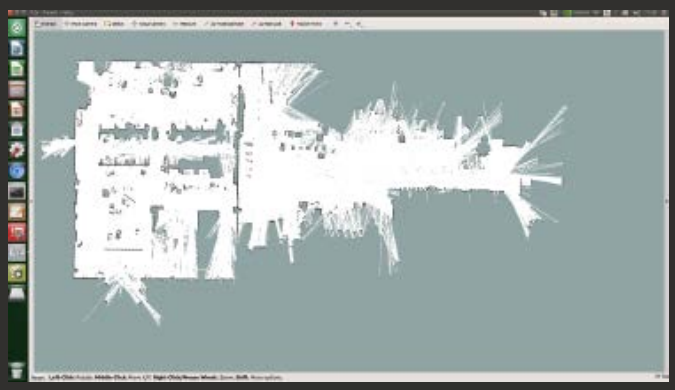

AUTOWARE Open Source Autonomous Kit

- Open source navigation
- Supporting DEMO
- ROS structure
- Ready to use

The Open Source Autonomous Kit (Localization kit for research and development)AgileX Autoware is the first fully integrated, Autonomous Driving Research and Development kit. Utilizing 3D Slam localization technology, Autoware is suitable for all driving environments including on and off-road environments.
Autoware is an open-sourced development kit built ROS (Robot Operating System) allowing you to easily integrate existing libraries or new payloads and sensors.

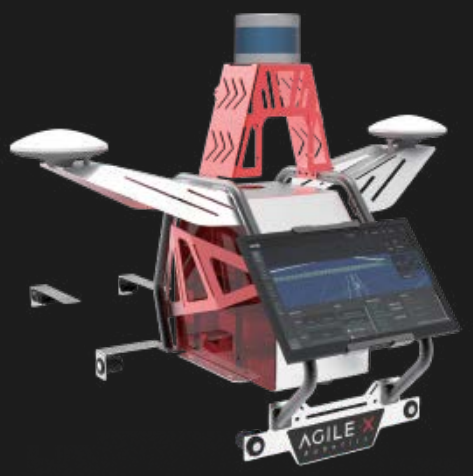

Autoware Includes	Table of Configuration List
Intel i7-9700 CPU	8 cores 8 threads 3.0GHz Max memory size 32GB
Multi line lidar Robosense RS-LiDAR-16	16 Channel, 905nm wave lenght, Accuracy +-2cm(typical), Measurement range 20cm to 150m (on 20% reflectivity target), data rate 320,000 pts/s
Display Module	Liquid crystal display screen mini-hdmi to hdmi wire USB to Type-C wire
Communication	USB-to-CAN module
Power Module	24V to 12V 24V to 19V
Communication Module	Interchanger
Compatible products	HUNTER HUNTER 2.0 SCOUT 2.0 BUNKER

* GPS module is not included in the standard package

FEATURE
Wire controlling of the vehicle introduction, control the vehicle by ROS
Utilize 3D point cloud for localization and Navigation
Path planning with obstacle avoidance.
Parking – Forward and Reverse
Lane Changes
Edit vector maps (Lane lines, zebra crossings, curbs, etc.)

Contents

Contact us

general-laser.at | office@general-laser.at | +43 1 524 76 03 | Wallgasse 25 A-1060 Vienna